Rethinking Electrons and the Electric Phenomenon.

Anton Vrba

Ein Gedankenexperiment

We accept: **An electric current is a flow of electric charge.**

We design an experiment to test the statement: **In electric circuits this charge is carried by electrons.**

Ein Gedankenexperiment

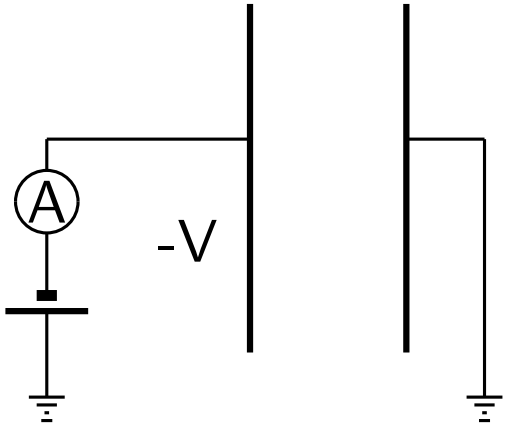

- We charge a capacitor $\mathtt{C}$, constructed from two parallel plates, placed in vacuum, to a voltage V. An electric field $\mathbf{E}$ is established between the plates.
- The plates carry a charge $Q = \mathtt{C}\,V$.
- Measuring the charging current I_c we also determine that $Q = \int_0^t I_c\,dt$
- Between the plates a displacement current $I_d = \varepsilon_0 \oint_{\mathcal{S}} d\mathcal{S} \cdot \frac{\partial \mathbf{E}}{\partial t} = I_c$ flowed.

INFERENCE: One plate has an excess of $N = Q/q_e$ electrons, the other plate a deficiency of the same amount, no electron's crossed the vacuous gap.

Ein Gedankenexperiment

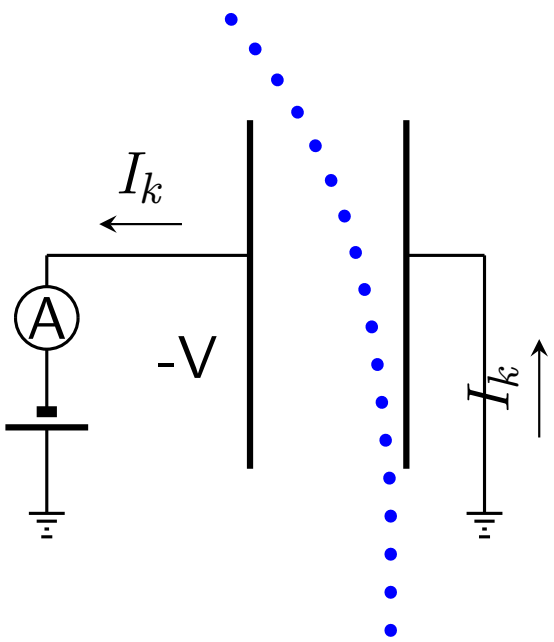

- We now introduce a particle beam with a positive charge, say protons. It has initial velocity $\vec{\nu} = \nu_y \hat{\mathrm{Y}}$ and particle density N per second.
- Between the capacitor plates the protons are attracted to the opposite charged plate, hence gain gain velocity in the X direction. Hence $\vec{\nu} = \nu_x \hat{\mathrm{X}} + \nu_y \hat{\mathrm{Y}}$ and gain kinetic energy K. (Momentum in Y direction is preserved)
- A current I_k starts too flow in the circuit,

Ein Gedankenexperiment

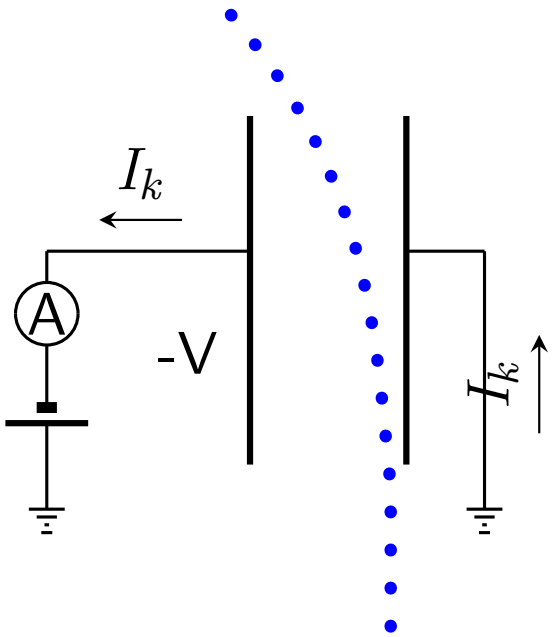

- Balancing the electrical power with the mechanical power, we have $VI_k = NK$, where K is the gain in kinetic energy of each particle and N the particle density [particles per second]

CONCLUSION: Electric current I_k cannot be a flow of electrons.

No electrons cross the vacuous gap and any further electrons, as charge carriers, that would accumulate on a plate contradicts $Q = CV$, because the voltage on the capacitor remained unchanged.

Ein Gedankenexperiment

We accepted: **An electric current is a flow of electric charge,**

and proved the statement: **In electric circuits this charge is carried by electrons,** as **FALSE**,

which raises questions:

- **Is electric charge and the flow of electric charge just an visualisation aid?**
- **Could electric current be something completely different?**

The Cinderella of Physics

Time has come to acknowledge the Cinderella of physics, and consider electric energy in all fields of physics.

- Quantum mechanics ignores electric energy. Only mass-, kinetic- and radiation energy is used in the energy balance equation
- Cosmologists ignore electric energy but are fans of magnetic force lines.

Electric energy is fundamental to the universe and our existence. Twenty percent of normal human energy intake is used to fuel the brain; for what purpose? To generate electric energy.

History

- Ancient Greeks: $\eta\lambda\epsilon\kappa\tau\rho o$ (electro) is the Greek word for amber.
- Andreas Cunaeus (1746) Leyden jar, published by physicist Petrus van Musschenbroek of Leyden University.
- Coulomb (1785) inverse square law.
- Volta (1795) Volta pile.
- Oested (1820) link between current and magnetism.
- Ampere (1820) force between current carrying conductors.
- Maxwell (1865) displacement current $I_{\mathrm{D}} = \dfrac{\partial \mathbf{E}}{\partial t}$
- Thomson (1897) discovered electron.
- Drude (1900) model for electric conduction using free electrons, derives current density $J = \left(\dfrac{nq_e^2}{m_e}\right)\mathbf{E}$.

Paul Drude's 1900 Model for Electric Conduction

Model assumes that the conduction electrons

- do not interact with the cations ("free electron approximation") except when one of them collides elastically with a cation which happens, on average, $\frac{1}{\tau}$ times per second;
- maintain thermal equilibrium through collisions, in accordance with Maxwell–Boltzmann statistics;
- Electric field exerts force $-q_e\mathbf{E} = m_e\frac{\mathrm{d}\nu}{\mathrm{d}t}$
- Average velocity $\nu = -\frac{q_e\mathbf{E}}{m_e}\tau$
- To obtain an expression for the current density $J = nq_e\nu$
- combining last two $J = \left(\frac{nq_e^2}{m_e}\right)\mathbf{E}$

Drude's model is universally accepted.

- Townsend (1903) described gas discharge and the resulting light emitting plasma is energised by the collisions of accelerated electrons with the atoms of the gas.
- Einstein (1905) Photoelectric current as electrons ejected from an illuminated surface to a nearby conductor, with kinetic energy received from the absorbtion of radiation.
- Frenkel (1926), Wagner and Schottky (1931), Jost (1933) described, for semiconductors, electron and hole conduction.
- Bardeen, Cooper, and Schrieffer (1957) electron pairs (Cooper pairs) as an explanation to superconductivity.

Einstein's 1905 Photoelectric Effect

Einstein theorised

- The energy in each light-unit is assumed equal to hf, in which h is Planck's constant an f the frequency of the light.
- The energy of the light, on absorbtion, dislodges an electron with kinetic energy $1/2 m_e \nu^2 = hf - w$, where w is the work necessary to separate electron from the atomic lattice.
- A current will flow in form of "Cathode Rays" (moving electrons) from the illuminated surface to a nearby neutral conductor.
- This current can be stopped by applying a positive voltage V to the emitting surface $Vq_e = hf - w$

Millikan's 1915 Photoelectric Results (Lithium)

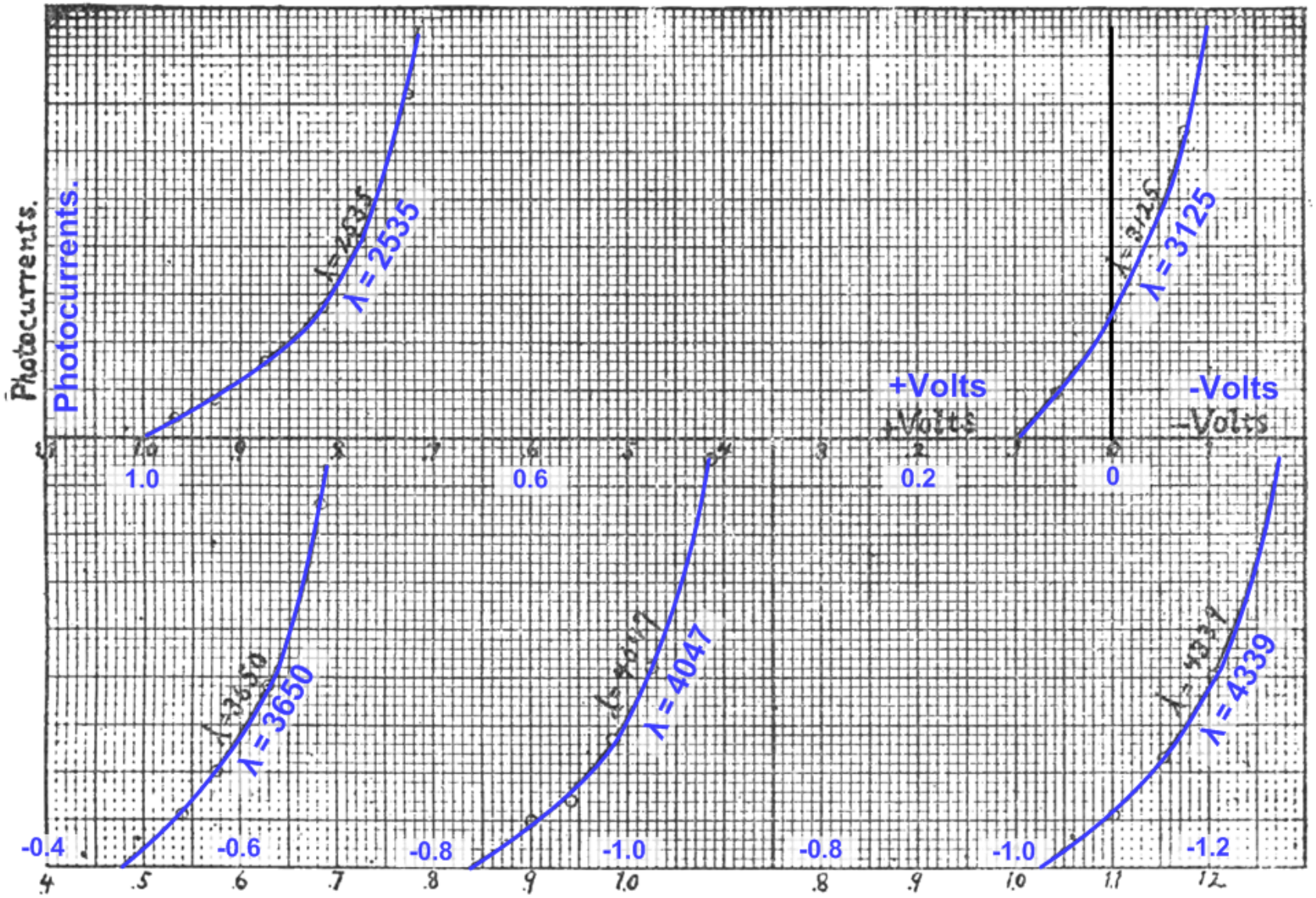

Millikan's 1915 Photoelectric Results (Lithium)

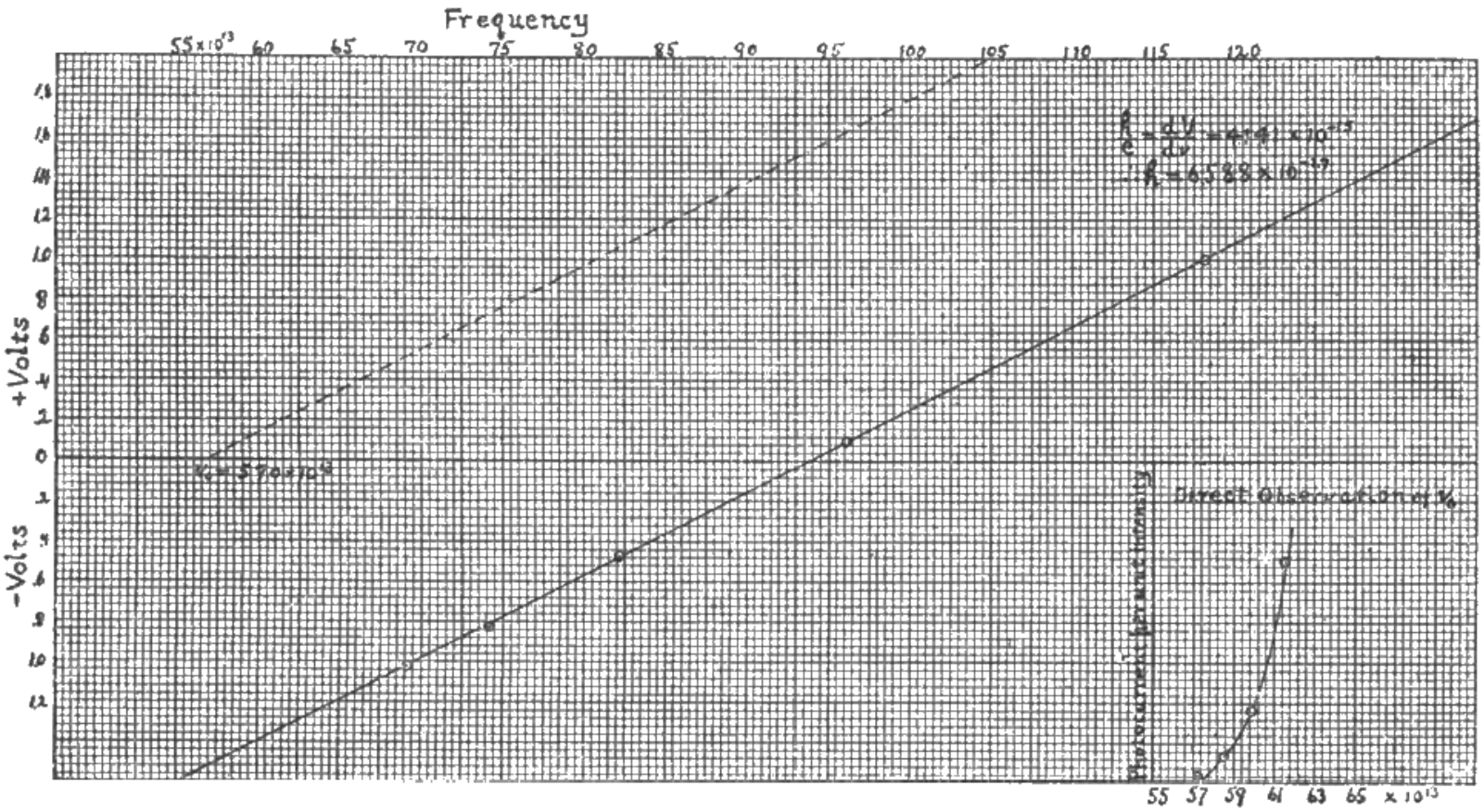

but had to introduce a contact EMF between different materials

$$\text{Contact EMF} = \frac{hf - hf_0'}{q_e} - (V_0 - V_0')$$

Millikan's 1915 Photoelectric Results (Lithium)

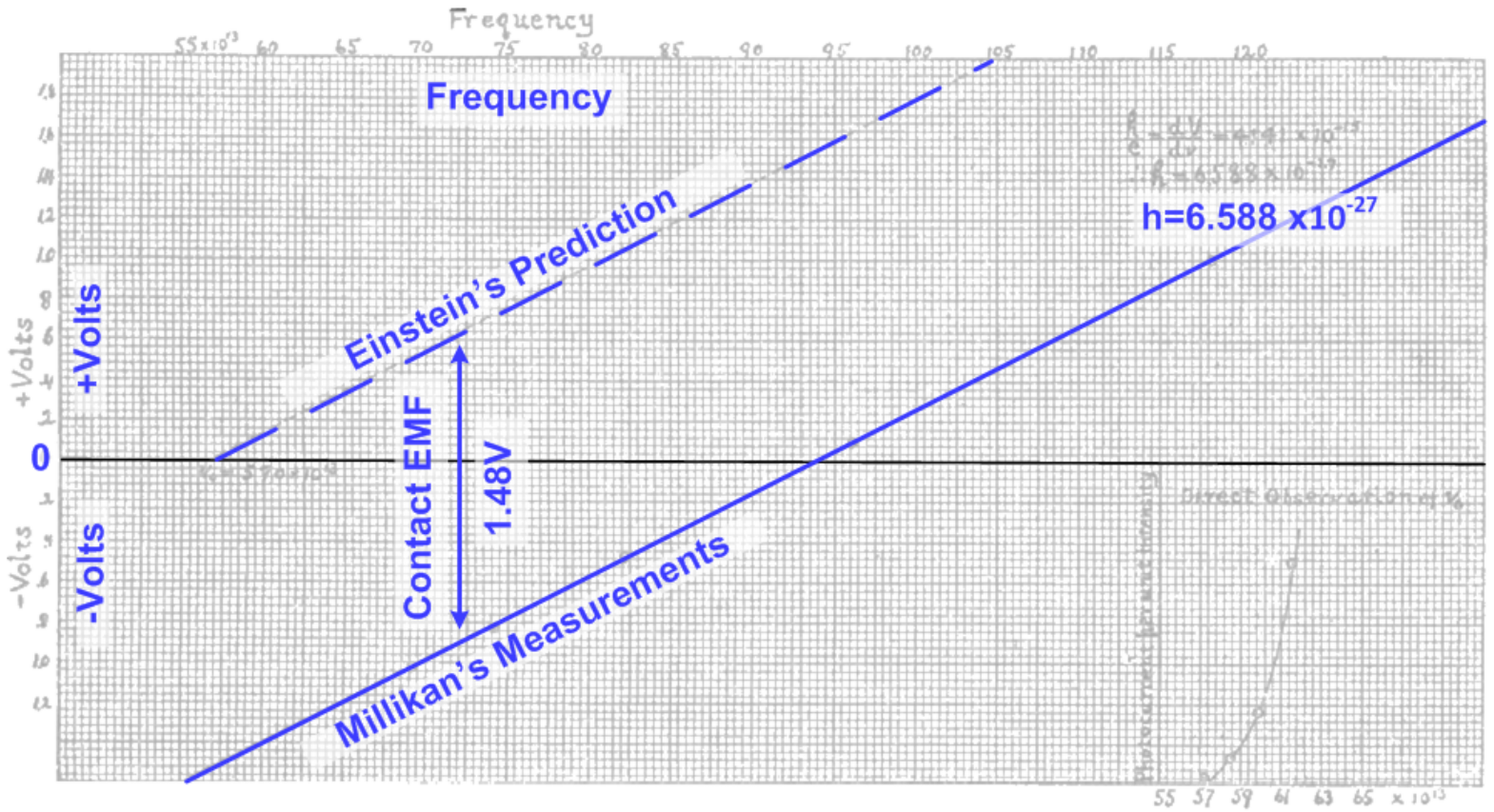

but had to introduce a contact EMF between different materials

$$\text{Contact EMF} = \frac{hf - hf_0'}{q_e} - (V_0 - V_0')$$

Millikan grasping at straws

Quoting Millikan:

The contact EMF between different materials

$$\text{Contact EMF} = \frac{hf - hf_0'}{q_e} - (V_0 - V_0')$$

in which f_0 and f_0' are the frequencies at which the cylinder and the plate respectively first become photo-sensitive, and V_0 and V_0' are the respective maximum potentials necessary to stop discharge into the cylinder from the plate and from another plate made from the substance of the cylinder.

I question the experimental and theoretical basis.

Millikan on Measuring Contact EMF

Quoting Millikan:

At any desired time the freshly cut sodium or lithium surface was rotated until it was opposite the test plate S, which was of copper treated as to oxidizing, washing, drying, etc., exactly as was the copper cylinder, so that the contact E.M.F. between the sodium and S should be the same as that between the sodium and the gauze cylinder. ***This contact E.M.F. was measured by the Kelvin method, i. e. by applying, with a potentiometer system, just such a P.D. between the sodium and the plate S that lifting S from a position say two tenths millimeter above the face of the sodium caused no motion in an electrometer needle connected to W.***

Millikan discovered the workings of a condenser microphone.

Summary

- (1865) Maxwell defines displacement current $I_{\mathrm{D}} = \dfrac{\partial \mathbf{E}}{\partial t}$
- (1897) Thomson discovered electron.
- (1900) Drude postulates current density $J = \left(\dfrac{nq_e^2}{m_e}\right)\mathbf{E}$.
- (1905) Einstein predicts the photoelectric effect, he proposes light dislodges electrons with kinetic energy, likens these to "Cathode Rays" and an electric current.
- (1915) Millikan confirms Einstein's prediction albeit by introducing the Contact EMF, which he measured using non photoelectric techniques.
- (Worldview) The physical description of electric current is the flow of charged particles be it electrons, protons, holes in semiconductors, ions in liquids, etc

Millikan's 1915 Photoelectric Results (Li) Revisited

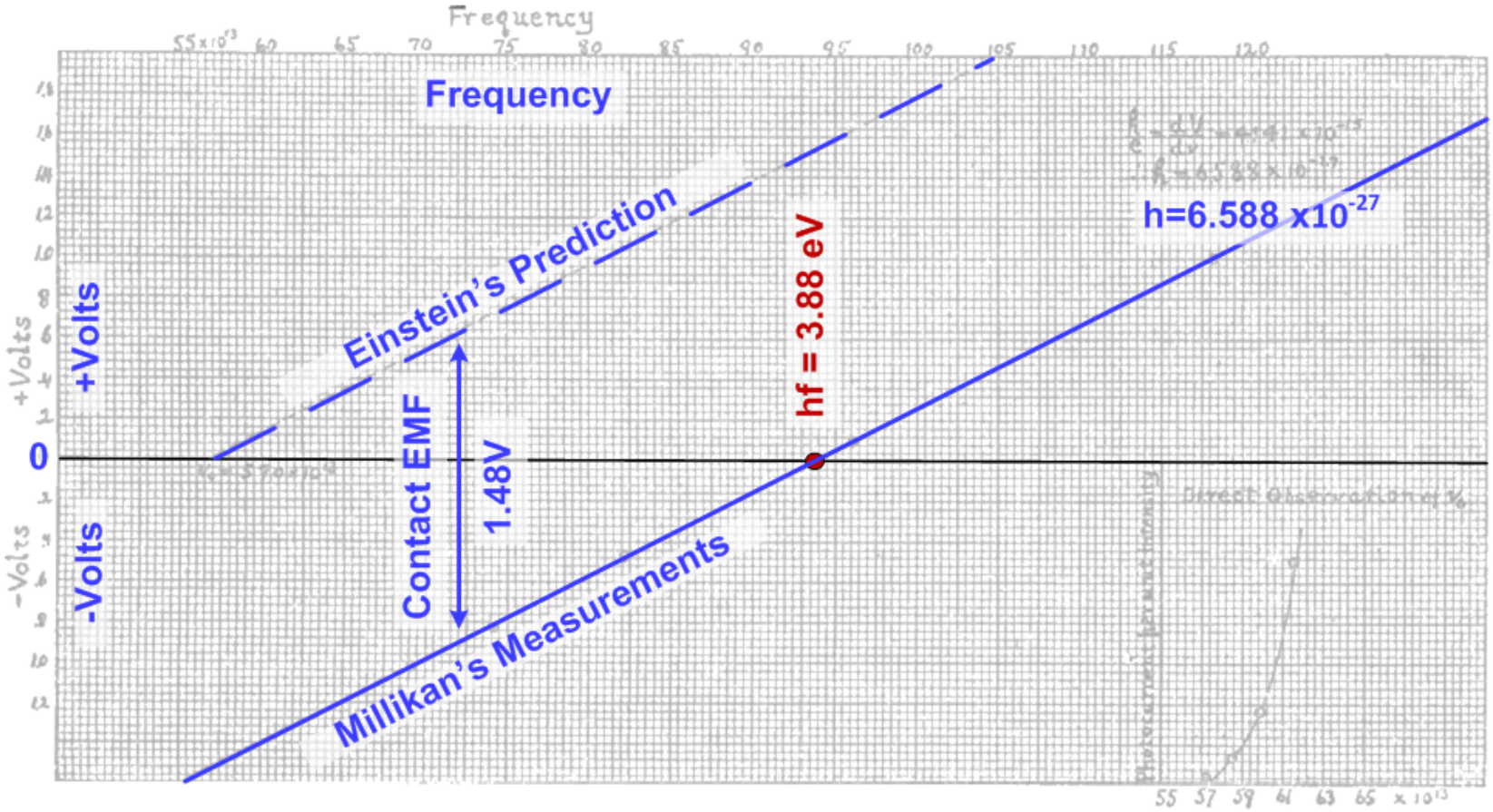

Millikan Revisited

New interpretation:

$$q_e V_s = hf - q_e V_{\text{phion}}$$

where V_s is the stopping voltage and $q_e V_{\text{phion}}$ is the ***photoionisation-energy*** of the material.

λ	4339	4047	3650	3125	2535	Å
$q_e V_s$	-1.02	-0.83	-0.48	+0.1	+1.00	eV
hf/q_e	2.86	3.07	3.40	3.97	4.89	eV
$q_e V_{\text{phion}}$	3.88	3.90	3.88	3.87	3.89	eV

Extended Photoelectric Effect

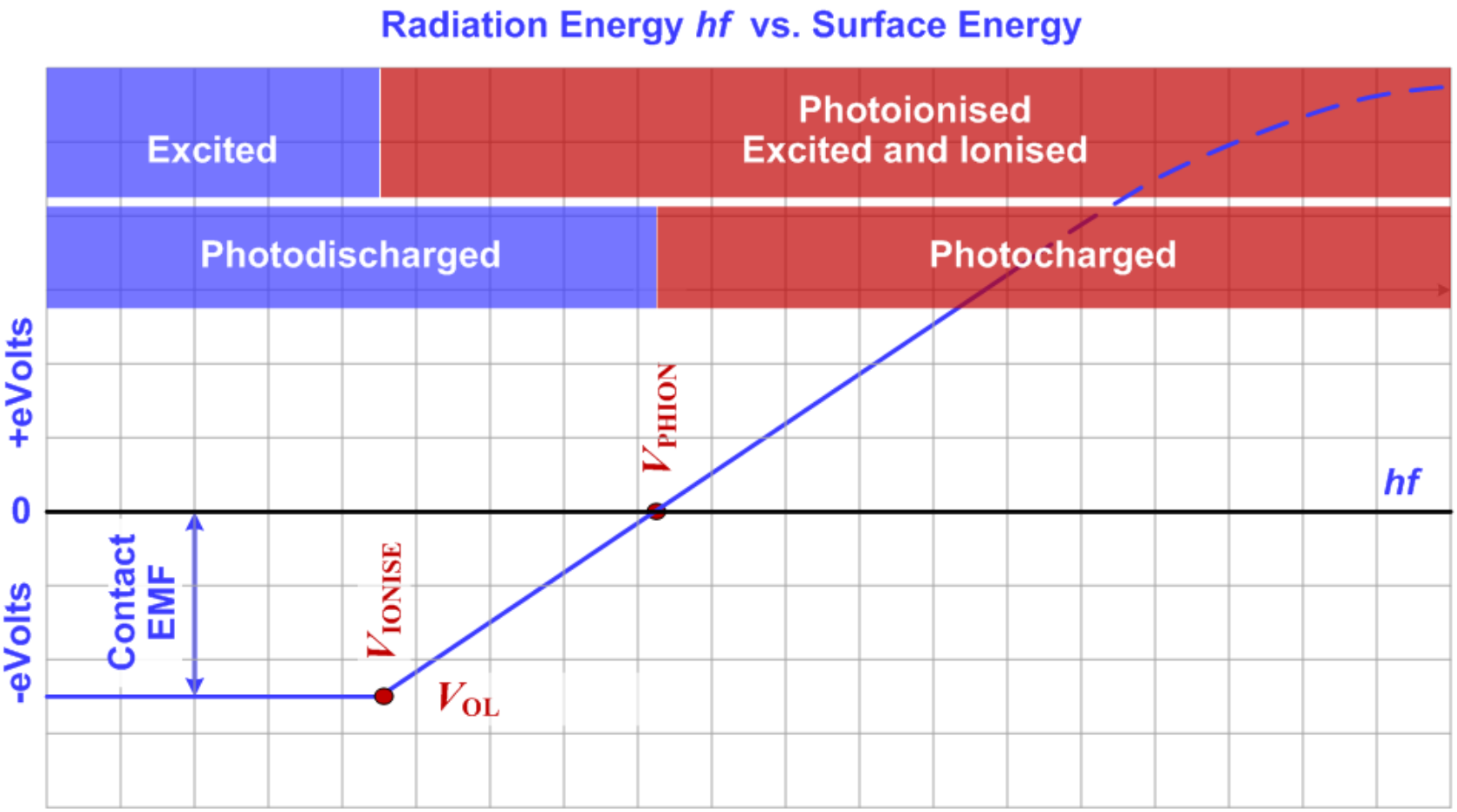

Proposition-1: Extend the Scope of Quantum Mechanics

- Electric Energy must be considered in quantum reactions.
- All atomic interactions and reactions are in fixed energy quanta. For the case if the exact quantum is not fulfilled, but the reaction/interaction has to take place, then a mechanism should exist that allows the borrowing, and storing of energy.
- Each material has an over draft limit for the amount of energy that can be borrowed, defined by $q_e V_{\mathrm{OL}}$ (or the contact EMF that Millikan measured)

Proposition-1: Extend Feynman Diagram

Introduce electric energy in Feynman diagrams

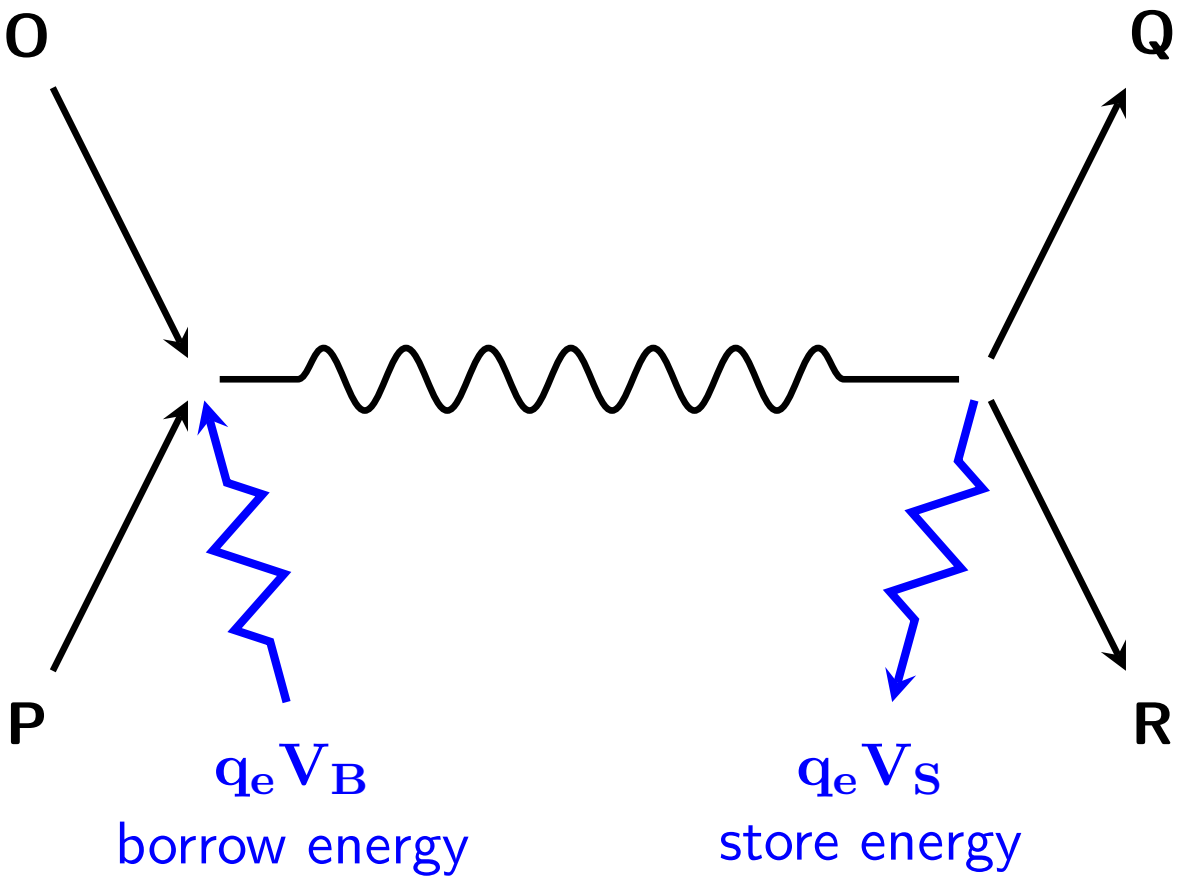

Health Warning

What follows is a figment of my imagination.

It needs further discussion and refinement.

Proposition-2: The Scintilla, a new particle

To explain the electric phenomena I propose:

- A new particle, the *Scintilla* (Latin: spark):
- The scintilla is massless, but carries energy qV_q
- (it is the carrier for charge q)
- (it is always associated with a potential V_q)
- it is underpinned by a wave function, propagating at c
- it is instrumental in setting up the electric and magnetic field.

Explaining the Thought Experiment

Ignoring, for now, the magnetic effects of an electric current

- Scintillas propagate equally well in materials and vacuum.
- Depending on the medium and to support the electric field, the scintilla transfers its energy to the space.
- The energy quanta in a quantised space that supports an electric field is
$$\mathcal{E} = \frac{1}{2}\epsilon \mathbf{E}^2 \varpi,$$
where ϖ is a quantised space volume and the direction vector of $\mathbf{E}$ equals the direction of propagation.
- Propagating through perfect conductors no energy is transferred into an electric field within the conductor.

Explaining the Thought Experiment

- The current flowing through a quantised space element is

$$\partial I_{\mathrm{D}} = \frac{\partial \mathbf{E}}{\partial t}$$

- The total current from a voltage source is

$$I = \oint |\partial I_{\mathrm{D}}|$$

Explaining the Thought Experiment

- We introduce a charged particle in the electric field.
- At a rate proportional to the charge of the particle, electric energy quanta

$$\mathcal{E} = \frac{1}{2}\epsilon \mathbf{E}^2 \varpi$$

  are converted to kinetic energy of the particle.
- This explains the underlying principle for the electric force

$$F = q\mathbf{E}$$

Explaining the Thought Experiment

- As the energy quanta

$$\mathcal{E} = \frac{1}{2}\epsilon \mathbf{E}^2 \varpi$$

  are consumed, the electric field lines are broken and need to reconnect, resulting in a $\partial\mathbf{E}$, partial changes in the electric field along the field lines.
- Therefore, a particle accelerating in an electric field give rise to a displacement current

$$\partial I_{\mathrm{D}} = \frac{\partial \mathbf{E}}{\partial t}$$

Explaining Joule Heating

- In a resistive conductor which carries current, internal electric fields along the conduction path excite (and possibly ionise) atoms of the atomic lattice and molecular structure.
- When this happens energy quanta $\mathcal{E}$ are consumed. As before, gives rise to a displacement current.
- When excited atoms return to the ground state, heat in radiation is released.
- Also if atomic ionisation takes place, electrons can accelerate, possibly avalanche, but always consuming energy quanta $\mathcal{E}$

Proposition-3: The Scintilla, a new particle

- In other work, I had proposed that an electron is complex mass, having a real and imaginary part.
- The electron interacts with the electric field that the scintilla mediated, therefore electric field is an imaginary component.
- In the same sense, the scintilla should have a real part, hence mass fields should exist which is not gravitational; a possible explanation for dark energy.

Therefore, the energy of a scintilla is

$$E = q_m V_m - q_e V_e$$

where q_m & V_m are real, and q_e & V_e imaginary quantities.

Finally

We cannot order men to see the truth or prohibit them from indulging in error.

Max Planck 1936

By admitting our shortcomings, we give our children hope that they too can contribute to the advancement of scientific thought.

Pierre-Marie Robitaille 2013